T

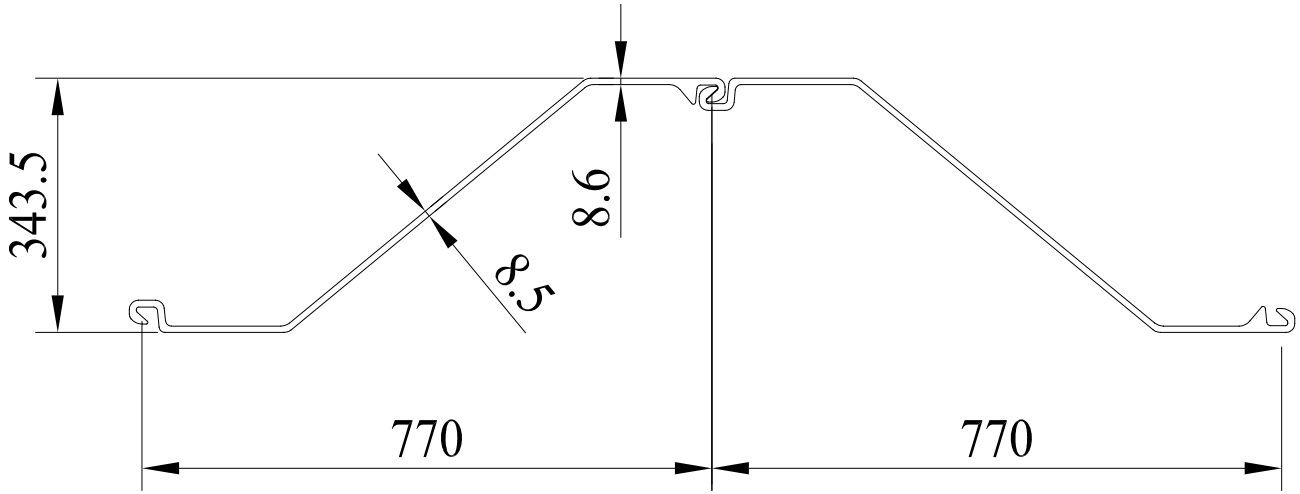

ESC-HRZ12-770

COMBINED PILE PROPERTIES									
SERIES	UNIT WIDTH W [in] *(mm)*	HEIGHT H [in] *(mm)*	FLANGE tf [in] *(mm)*	WEB tw [in] *(mm)*	MASS [lb/ft] *(kg/m)*	MASS [lb/ft²] *(kg/m²)*	TOTAL MODULUS [in³/ft] *(cm³/m)*	TOTAL MOMENT OF INERTIA [in⁴/ft] *(cm⁴/m)*	Coating Area both side [ft²/ft] *(m²/m)*
HRZ 12-770	**30.31** *(770)*	**13.52** *(343.5)*	**0.339** *(8.6)*	**0.335** *(8.5)*	***48.92*** *(72.8)*	**19.37** *(94.5)*	**23.3** *(1252)*	**157.4** *(21496)*	***6.44*** *(1.96)*

Issue	Revision	Date	Initial
O			
N			
M			
L			
K			
J			
I			
H			
G			
F			
E			
D			
C			
B			
A			

Notes:

All dimensions in millimetres

ESC Client:

Manufacturer:

ESC ASIA LIMITED
12/F, Unit 19, Shatin Galleria
18-24 Shan Mei Street, Fo Tan
New Territories, Hong Kong

T: +852 3956 1872
E: eschk@escpile.com

Project Title:

An Affiliate of: MARUBENI ITOCHU STEEL

Drawing Title:

ESC-HRZ12-770

Stamp: Signature:

MANUFACTURING DRAWING

Designed	Drawn	Checked		Rev.
LILI	LILI	HUBERY		A
Scale	Date	Job No.		
	2019.6.25			